US011330364B1

(12) **United States Patent**
Delay et al.

(10) **Patent No.: US 11,330,364 B1**
(45) **Date of Patent: May 10, 2022**

(54) **PORTED SPEAKER ASSEMBLY**

(71) Applicant: **Robert Bosch GmbH**, Stuttgart (DE)

(72) Inventors: **Mark Delay**, Saint Paul, MN (US); **Andrew Pardoe**, Eden Prairie, MN (US); **Nolen Ryba**, Minnetonka, MN (US)

(73) Assignee: **Robert Bosch GmbH**, Stuttgart (DE)

(*) Notice: Subject to any disclaimer, the term of this patent is extended or adjusted under 35 U.S.C. 154(b) by 0 days.

(21) Appl. No.: **17/147,236**

(22) Filed: **Jan. 12, 2021**

(51) **Int. Cl.**

H04R 9/06	(2006.01)
H04R 1/28	(2006.01)
H04R 1/02	(2006.01)
H04R 1/24	(2006.01)
H04R 1/30	(2006.01)
H04R 1/20	(2006.01)

(52) **U.S. Cl.**
CPC ***H04R 1/2826*** (2013.01); ***H04R 1/025*** (2013.01); ***H04R 1/24*** (2013.01); ***H04R 1/2888*** (2013.01); ***H04R 1/30*** (2013.01); *H04R 2400/11* (2013.01)

(58) **Field of Classification Search**
CPC H04R 1/2826; H04R 1/025; H04R 1/24; H04R 1/2888; H04R 1/30; H04R 2400/11
USPC 381/335
See application file for complete search history.

(56) **References Cited**

U.S. PATENT DOCUMENTS

2,167,625	A	8/1939	Albano	
2,852,087	A	9/1958	Ruschhaupt	
3,169,601	A	2/1965	Smith	
3,342,498	A	9/1967	Eberhardt	
4,220,220	A *	9/1980	Ripple	H04R 1/2834 181/148
4,298,087	A	11/1981	Launay	
4,440,260	A	4/1984	Jacobsen	
5,189,706	A	2/1993	Saeki	
6,062,339	A	5/2000	Hathaway	
6,144,751	A	11/2000	Velandia	

(Continued)

OTHER PUBLICATIONS

Half Price Car Audio, "Car Audio Dual 12 Slot Ported Stereo Labyrinth Sub Box Speaker Subwoofer 3/4 Mdf & Sub Wire Kit", <https://www.halfpricecaraudio.com/Car-Audio-Dual-12-Slot-Ported-Stereo-Labyrinth-Sub-Box-Speaker-Subwoofer-3-4-Mdf-Sub-Wire-Kit-2X12VMBASS-WKIT.htm>, webpage publicly available at least as early as Jun. 2020.

(Continued)

Primary Examiner — Ammar T Hamid
(74) *Attorney, Agent, or Firm* — Michael Best & Friedrich LLP

(57) **ABSTRACT**

A ported speaker assembly includes an outer enclosure having a front opening. An inner frame of the speaker assembly is positioned at least partially within the outer enclosure and has an outer perimeter edge proximate the front opening of the outer enclosure. A resonator chamber is defined between an interior of the outer enclosure and an exterior of the inner frame. At least one speaker driver is mounted to the inner frame and configured to emit sound from a front end of the ported speaker assembly. A perimeter port is formed between the outer perimeter portion of the inner frame and the front opening of the outer enclosure. The perimeter port extends uninterrupted to encircle the outer perimeter portion. A plurality of fastener joints secure the inner frame to the outer enclosure, and at least some are distributed around multiple sides of the inner frame and positioned closer to the front opening of the outer enclosure than a rear end of the inner frame.

19 Claims, 6 Drawing Sheets

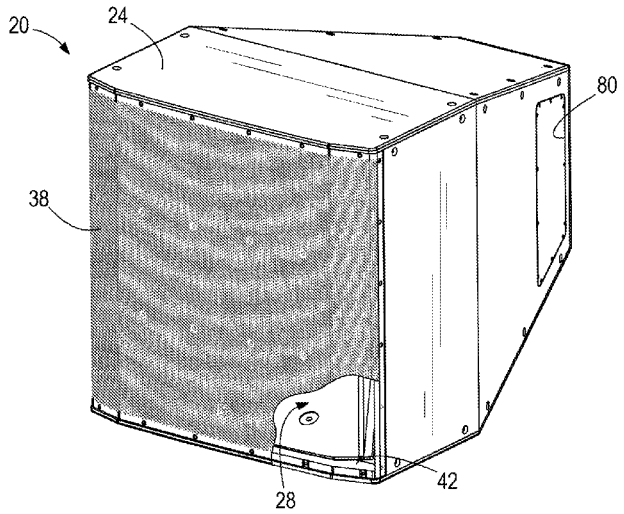

(56) **References Cited**

U.S. PATENT DOCUMENTS

6,339,649	B1	1/2002	Chen et al.	
7,162,048	B2 *	1/2007	Shima	H04R 1/025 381/334
7,450,733	B2	11/2008	Suprapmo et al.	
8,406,444	B2	3/2013	Wang	
2007/0261911	A1 *	11/2007	Nichols	H04R 1/2826 181/150
2009/0211840	A1 *	8/2009	Jiang	H04R 1/02 181/199

OTHER PUBLICATIONS

JBL Pro, "PD700i Series Precision Directivity Dual-Trap", <https://jblpro.com/en/product_families/pd700i-series-precision-directivity-dual-trap>, webpage publicly available at least as early as Apr. 2020, 3 pages.

Fulcrum Acoustic, "AH4—Higher-Output—Coaxial Horn", <https://www.fulcrum-acoustic.com/product/ah4-higher-output-coaxial-horn/>, webpage publicly available at least as early as Apr. 2020, 4 pages.

Danley Sound Labs, "Synergy Horn", <https://www.danleysoundlabs.com/products/loud-speakers/synergy-horn/>, webpage publicly available at least as early as Apr. 2020, 4 pages.

Danley Sound Labs, "Jericho Series", <https://www.danleysoundlabs.com/jericho-series/>, webpage publicly available at least as early as Apr. 2020, 4 pages.

* cited by examiner

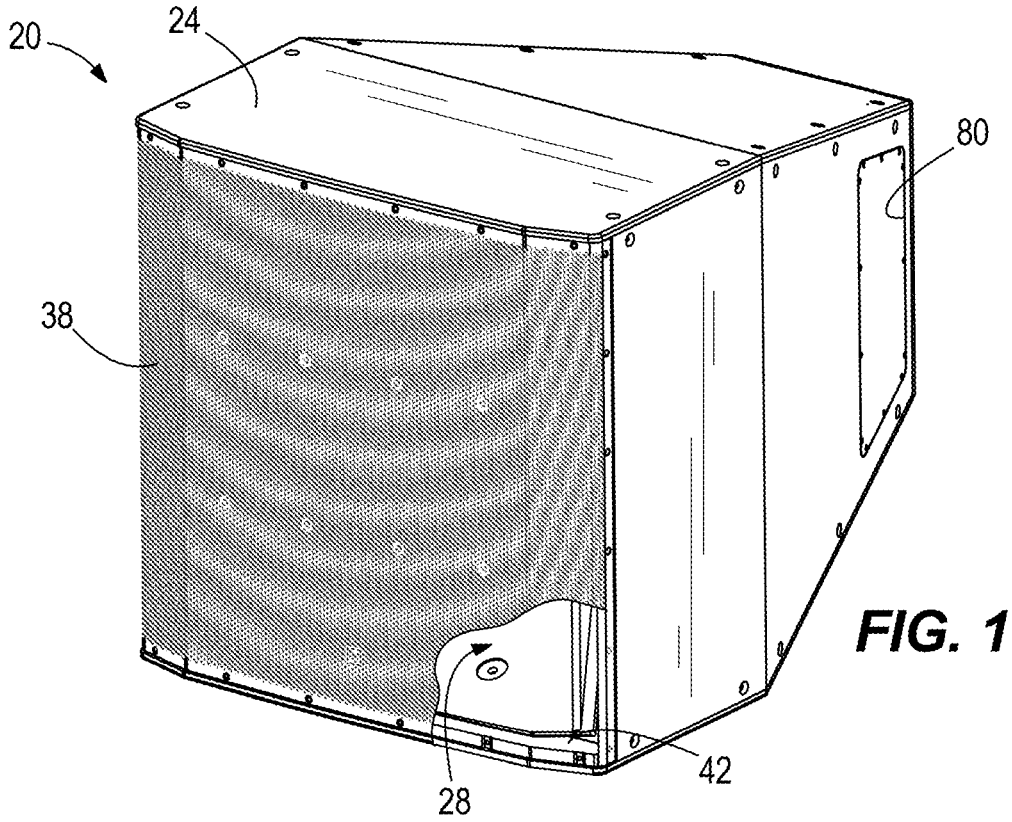

FIG. 1

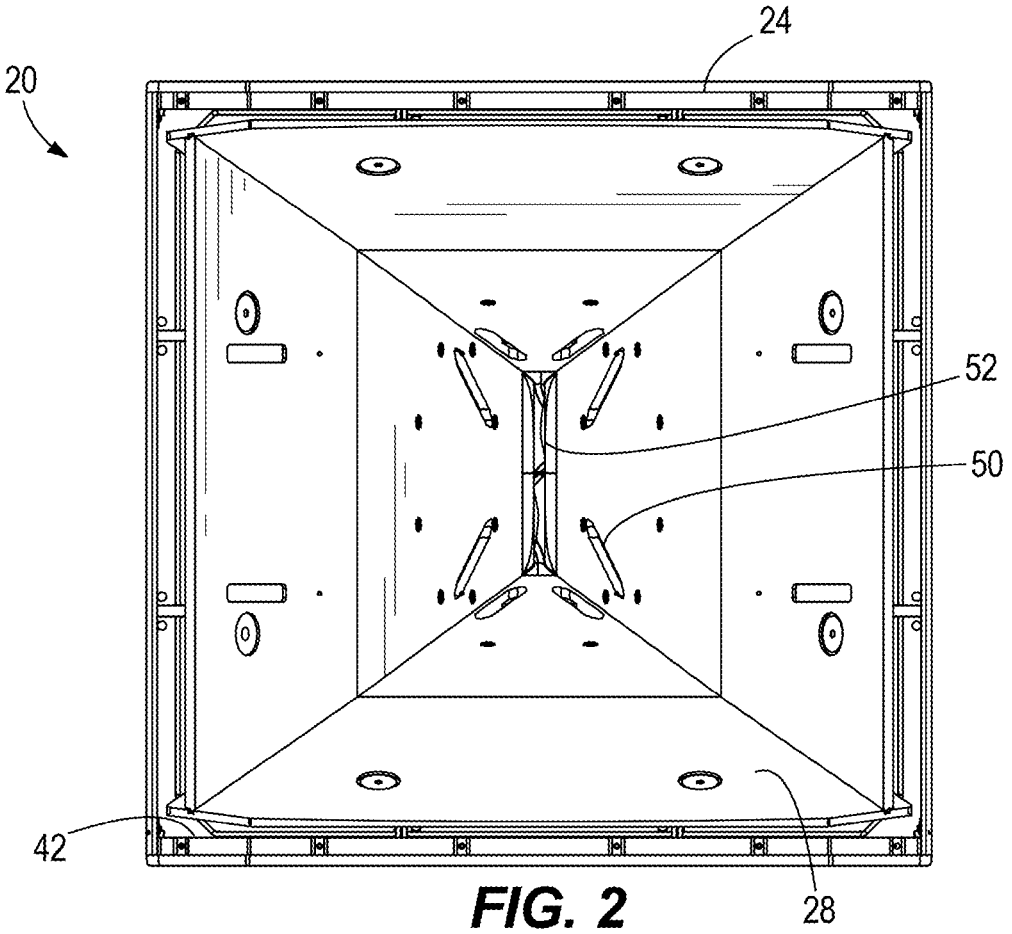

FIG. 2

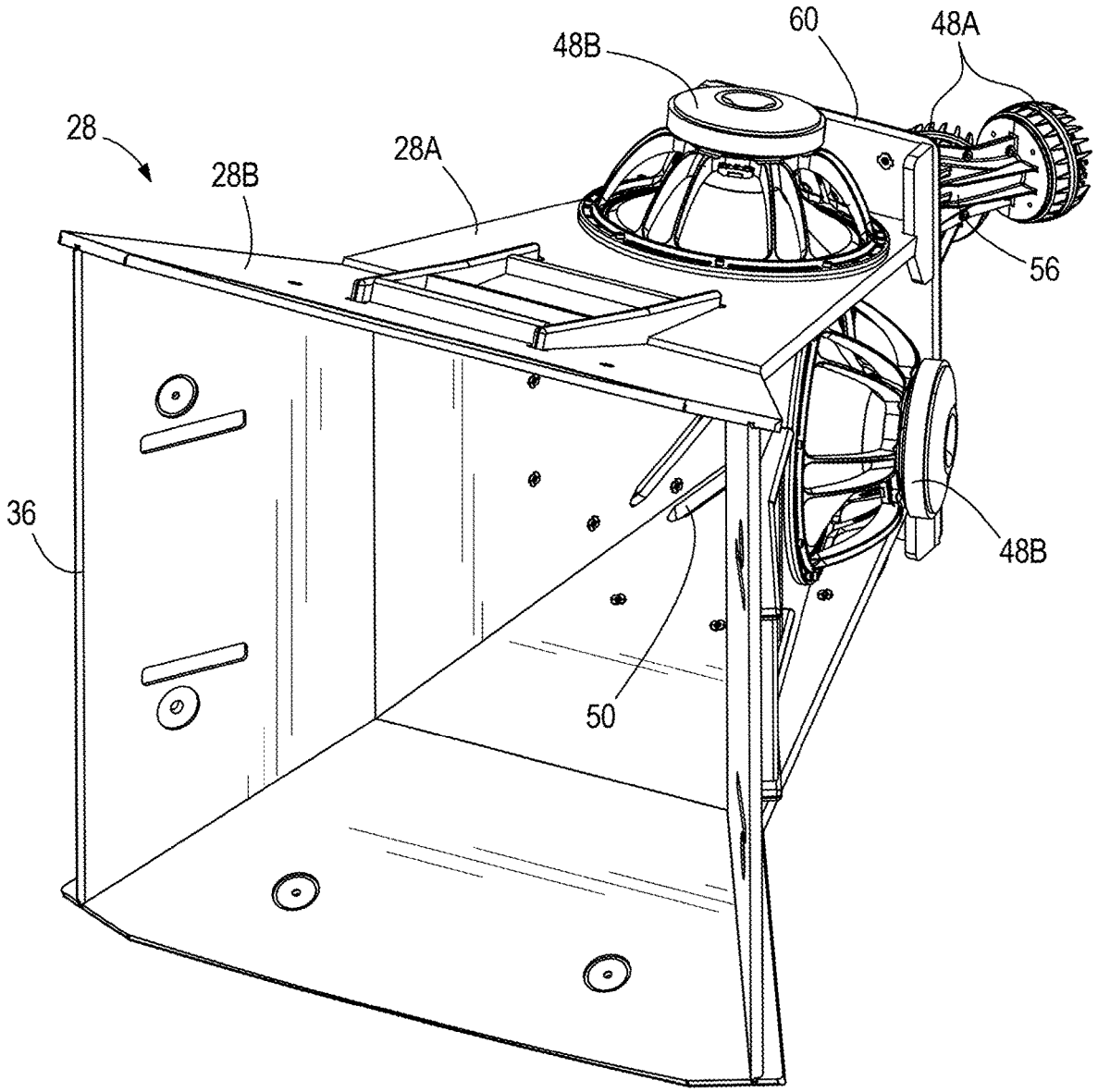

FIG. 3

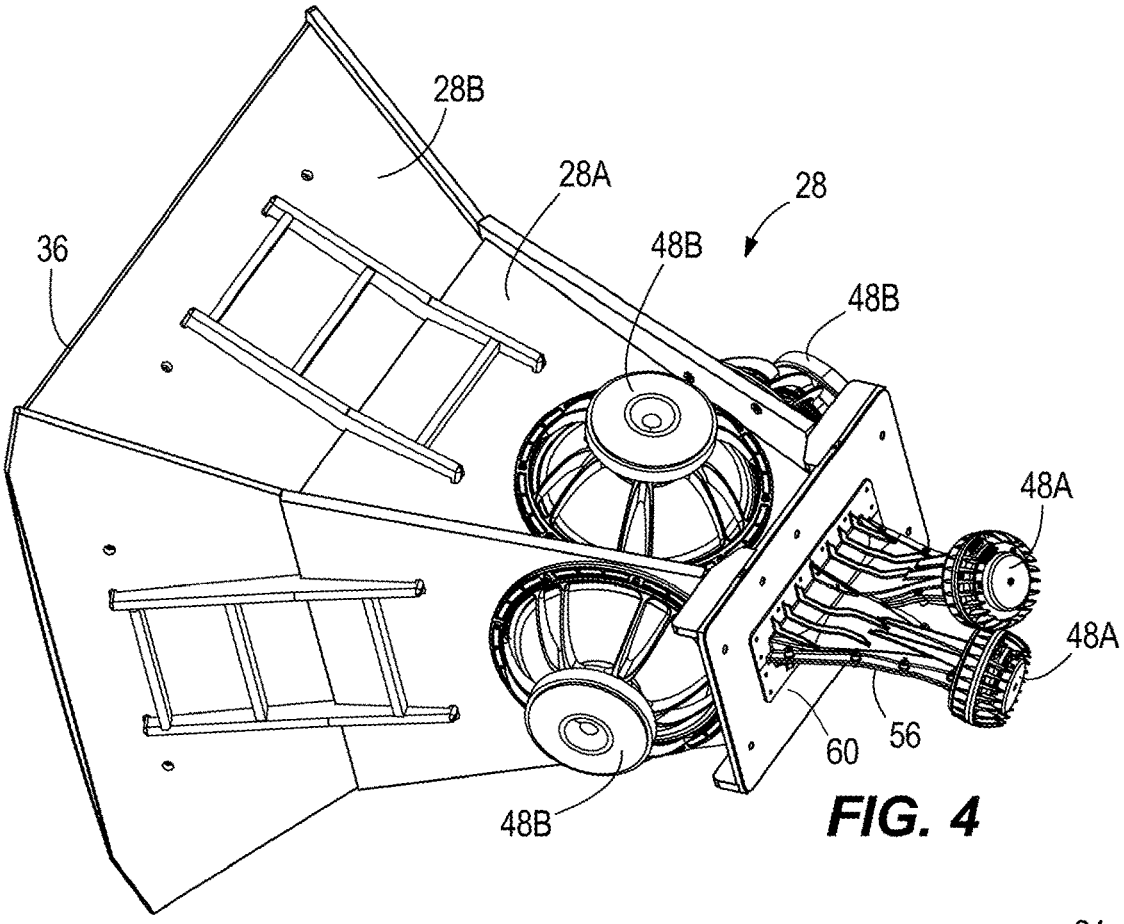
28B
28A
28
36
48B
48B
48A
48A
60
56
48B

FIG. 4

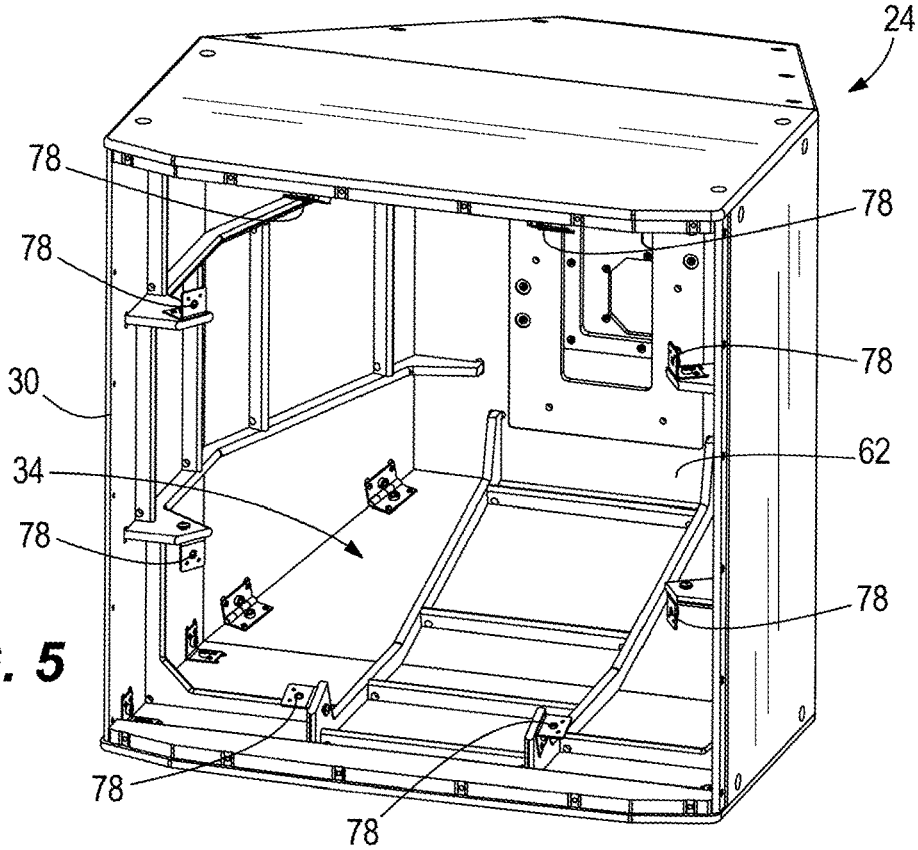
24
78
78
78
78
30
62
34
78
78
78
78

FIG. 5

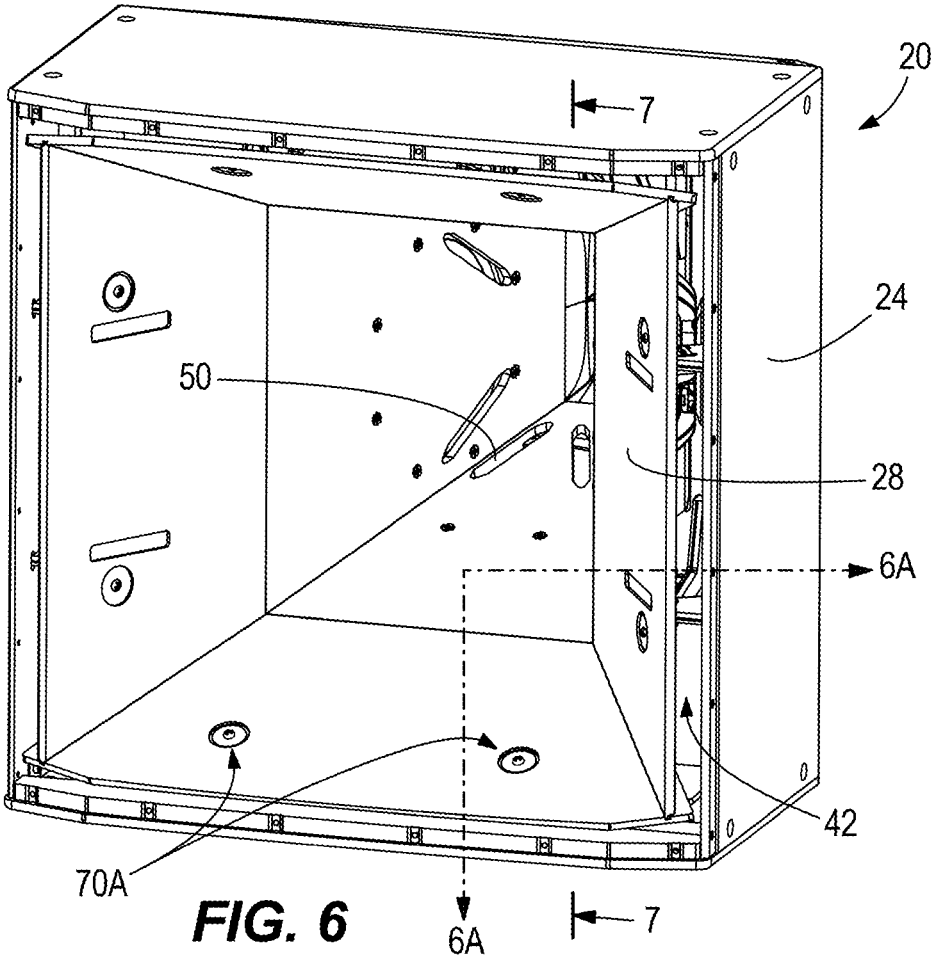

FIG. 6

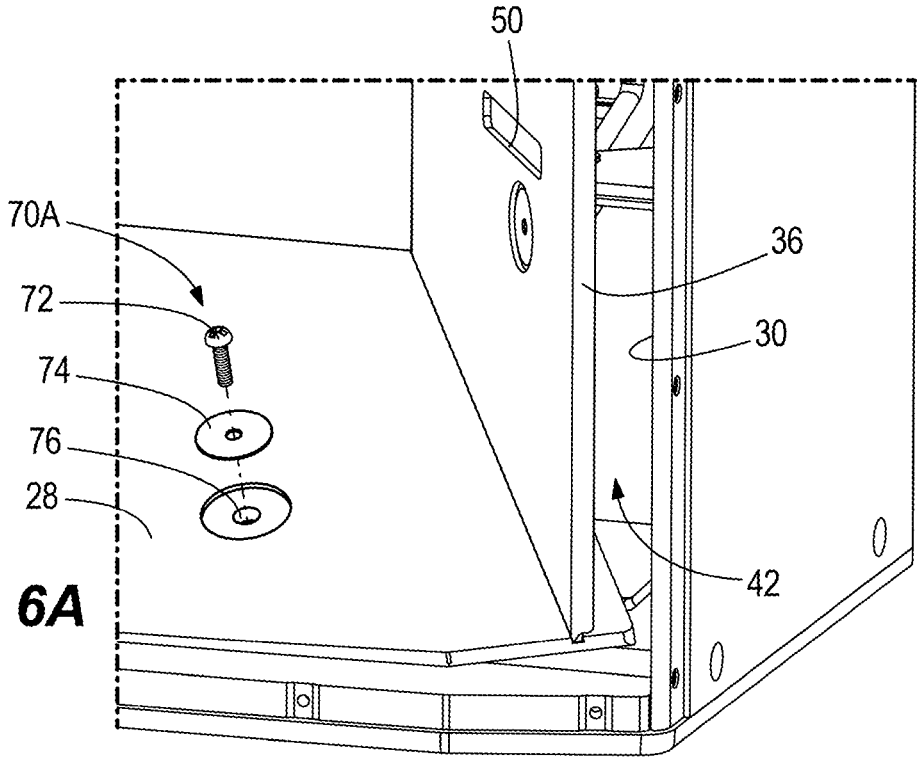

FIG. 6A

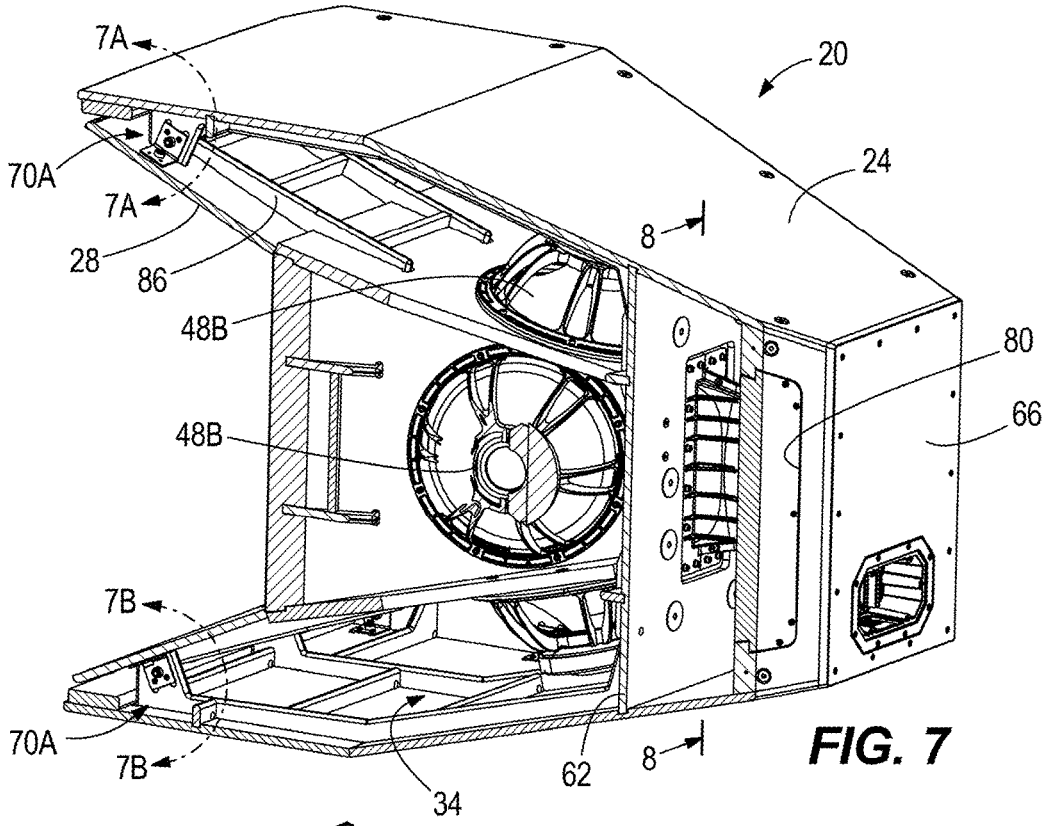

FIG. 7

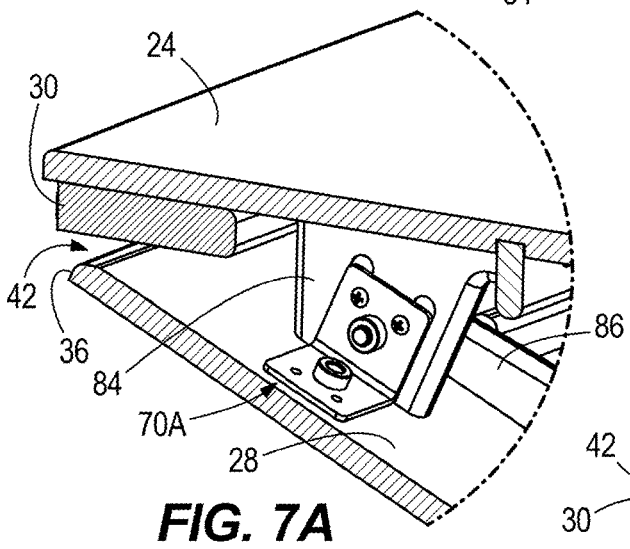

FIG. 7A

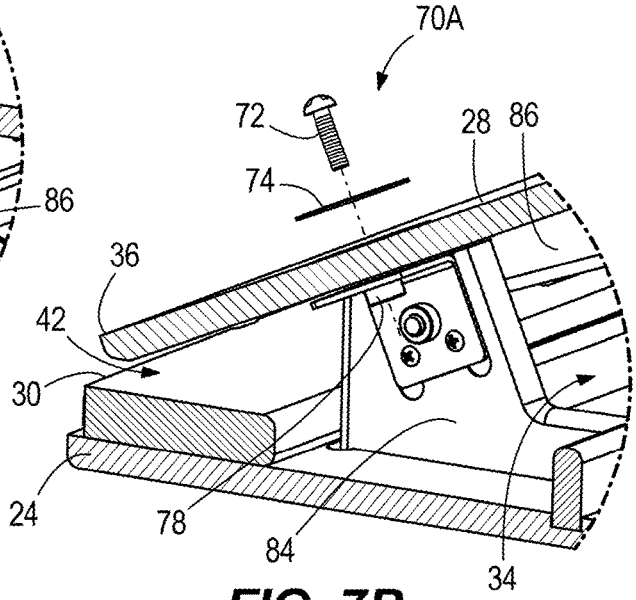

FIG. 7B

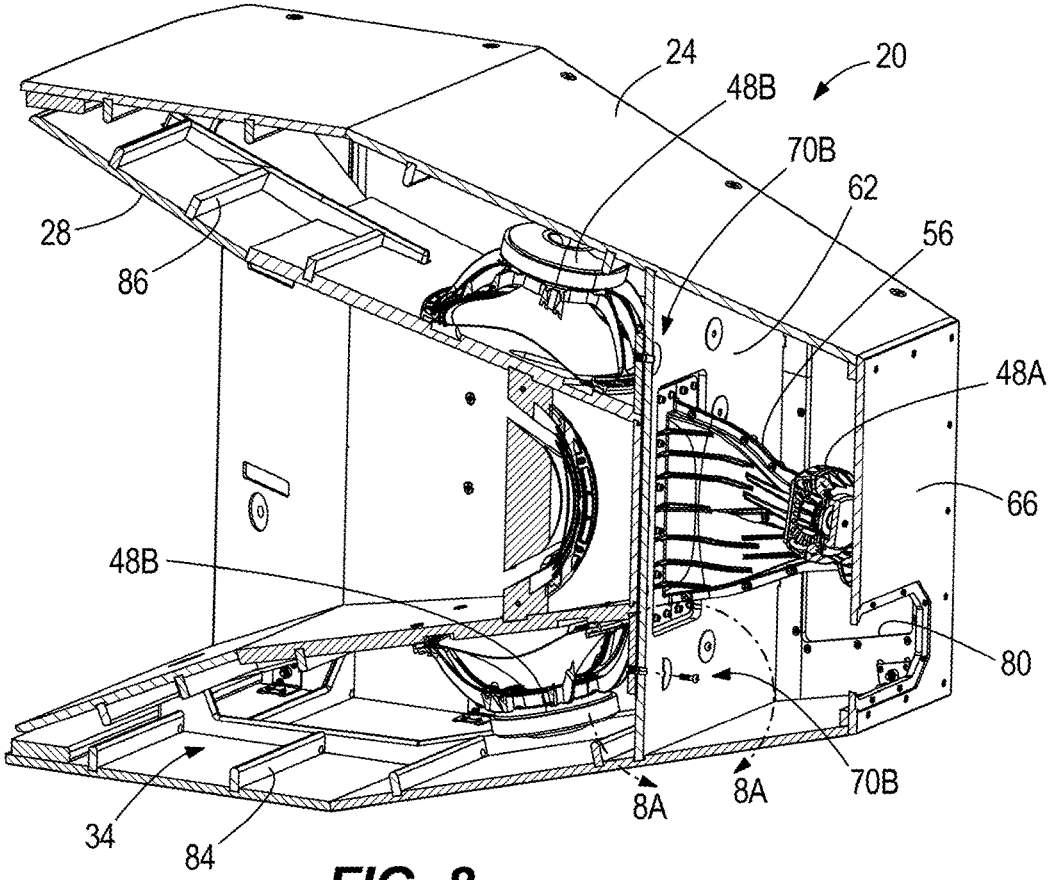
24
20
48B
70B
62
56
28
86
48A
66
48B
80
70B
8A
8A
34
84

FIG. 8

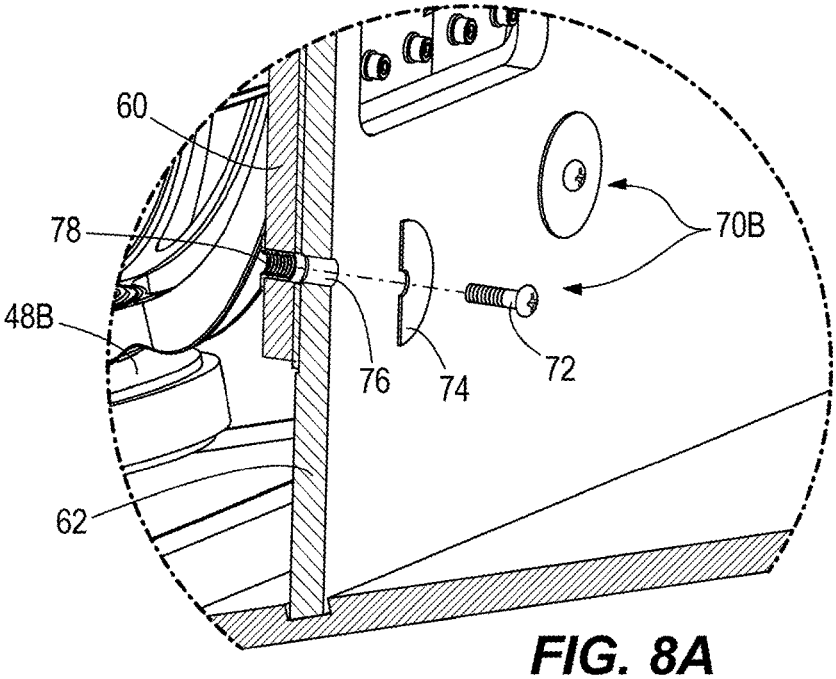
60
78
70B
48B
76
74
72
62

FIG. 8A

PORTED SPEAKER ASSEMBLY

BACKGROUND

The present invention relates to the manufacture of speaker assemblies for audio reproduction. Cabinets or enclosures for large speaker assemblies, and in particular loudspeakers that contain two, three, or more drivers including one or more large low frequency drivers, can impart substantial requirements for part tolerancing, across numerous fastening locations, and/or relative difficulty in mating the large subassemblies that make up the speaker assembly. A speaker assembly that incorporates a tuned-frequency resonator chamber further adds design complexity to the overall assembly, and typically forces an overall larger envelope than otherwise required for the size of the driver(s) provided.

SUMMARY

In one aspect, the invention provides a ported speaker assembly including an outer enclosure having a front opening. An inner frame of the speaker assembly is positioned at least partially within the outer enclosure and has an outer perimeter portion proximate the front opening of the outer enclosure. A resonator chamber is defined between an interior of the outer enclosure and an exterior of the inner frame. At least one speaker driver is mounted to the inner frame and configured to emit sound from a front end of the ported speaker assembly. A perimeter port is formed between the outer perimeter portion of the inner frame and the front opening of the outer enclosure to establish sound wave communication between the resonator chamber and a surrounding external atmosphere for tuned-frequency resonance output. The perimeter port extends uninterrupted about the outer perimeter edge of the inner frame so as to encircle the outer perimeter edge. A plurality of fastener joints secure the inner frame to the outer enclosure, and at least some of the plurality of fastener joints are distributed around multiple sides of the inner frame and positioned closer to the front opening of the outer enclosure than a rear end of the inner frame.

In another aspect, the invention provides a ported speaker assembly including an outer enclosure having a front opening defined between a top side, a bottom side, and two lateral sides, the outer enclosure defining an internal resonator chamber. An inner frame is positioned at least partially within the outer enclosure and having an outer perimeter portion proximate the front opening of the outer enclosure. A resonator chamber is defined between an interior of the outer enclosure and an exterior of the inner frame. At least one speaker driver is mounted to the inner frame and configured to emit sound from a front end of the ported speaker assembly. A perimeter port is formed between the outer perimeter portion of the inner frame and the front opening of the outer enclosure to establish sound wave communication between the resonator chamber and a surrounding external atmosphere for tuned-frequency resonance output. A plurality of fastener joints secure the inner frame to the outer enclosure, each of the plurality of fastener joints including a threaded fastener, a clearance hole for receiving the threaded fastener, and a nut portion for engaging the threaded fastener. The clearance hole of each of the plurality of fastener joints provides a clearance at least 25 percent over standard normal clearance for the size of the threaded fastener.

In yet another aspect, the invention provides a method of assembling a speaker assembly. An outer enclosure is provided having a front opening, and an inner frame is provided having an outer perimeter portion with a shape that corresponds to that of the front opening and a size that is smaller than that of the front opening. At least one speaker driver is assembled to the inner frame with the inner frame removed from the outer enclosure. The inner frame with the at least one mounted speaker driver is inserted into the outer enclosure through the front opening thereof to form a perimeter port between the outer perimeter portion of the inner frame and the front opening of the outer enclosure and to define a resonator chamber between an interior of the outer enclosure and an exterior of the inner frame. All assembly tolerance between the inner frame and the outer enclosure is absorbed through a plurality of fastener joints that are secured between the inner frame and the outer enclosure.

Other aspects of the invention will become apparent by consideration of the detailed description and accompanying drawings.

BRIEF DESCRIPTION OF THE DRAWINGS

FIG. **1** is a front perspective view of a perimeter ported speaker assembly according to one embodiment of the invention. A frontal grille is rendered transparent to illustrate internal detail.

FIG. **2** is a front view of the speaker assembly of FIG. **1**.

FIG. **3** is a front perspective view of an inner frame of the speaker assembly, which acts as an acoustic horn supporting a plurality of high and low frequency speaker drivers.

FIG. **4** is a rear perspective view of the inner frame.

FIG. **5** is a front perspective view of an outer enclosure of the speaker assembly in which the inner frame is at least partially received.

FIG. **6** is a front perspective view illustrating one exemplary fastener joint between the outer enclosure and the inner frame in exploded assembly.

FIG. **6**A is a detail view of a lower right hand side of the speaker assembly as shown in FIG. **6**.

FIG. **7** is a cross-section view, taken along line **7-7** of FIG. **6**.

FIG. **7**A is a detail view of a portion of FIG. **7** showing an assembled forward fastener joint.

FIG. **7**B is a detail view of a portion of FIG. **7** showing an exploded forward fastener joint.

FIG. **8** is a cross-section view, taken along line **8-8** of FIG. **7**.

FIG. **8**A is a detail view of a portion of FIG. **8** showing a rearward fastener joint.

DETAILED DESCRIPTION

Before any embodiments of the invention are explained in detail, it is to be understood that the invention is not limited in its application to the details of construction and the arrangement of components set forth in the following description or illustrated in the accompanying drawings. The invention is capable of other embodiments and of being practiced or of being carried out in various ways.

A ported speaker assembly **20** is illustrated in FIGS. **1-8**A. The illustrated speaker assembly **20** is a multi-driver horn-loaded loudspeaker, although alternate configurations are optional while retaining other aspects of the present disclosure. As shown in FIGS. **1-5**, the speaker assembly **20** includes an outer shell or enclosure **24** and an inner frame **28** positioned at least partially within the outer enclosure **24**. In

some constructions, one or both of the outer enclosure **24** and the inner frame **28** are constructed of wood (e.g., solid wood, manufactured wood, or particle board), and may be constructed of a plurality of wood pieces glued and/or fastened together. The inner frame **28** of the illustrated construction forms an acoustic horn. As shown in FIG. **6**, the outer enclosure **24** defines a front opening **30** leading to an internal resonator chamber **34** that cooperates with a port **42** to form a tuned-frequency resonator system (or so-called "bass reflex" system). As will be appreciated by those of skill in the art, the tuned-frequency resonator system is an acoustic example theoretically following the model of a mechanical spring-mass system in which the resonator chamber **34** has a prescribed air volume that correlates to spring stiffness, while the mass is represented by the configuration of the port **42**, in particular decreasing with increasing cross-section area and increasing with increasing length. The inner frame **28** has an outer perimeter portion proximate the front opening **30** of the outer enclosure **24**. For example, a front edge **36** of the inner frame **28** may constitute the outer perimeter portion, positioned directly within the front opening **30** of the outer enclosure **24**. However, alternate constructions are envisioned, particularly where the front edge **36** extends out forward of the front opening **30** or is recessed therefrom. The shape of the perimeter portion of the inner frame **28** corresponds to that of the front opening **30**, although it is smaller. As described in further detail below, the port **42** is a perimeter port **42** formed between the outer perimeter portion (e.g., front edge **36** as shown) of the inner frame **28** and the front opening **30** of the outer enclosure **24**. The perimeter port **42** provides sound wave communication between the internal resonator chamber **34** and the surrounding external atmosphere. The perimeter port **42** extends uninterrupted about the outer perimeter of the inner frame **28** so as to encircle it. The perimeter port **42** has a rectangular shape in front view, owing to the rectangular cross-sections of both the front opening **30** and the outer perimeter portion of the inner frame **28**. A front grille **38** (FIG. **1**, shown with partial breakaway) constructed of mesh, screen, fabric, perforated sheeting or another suitable material is positioned at the front end of the speaker assembly **20** and may be secured at the front opening **30**.

The speaker assembly **20** includes at least one speaker driver **48**A, **48**B mounted to the inner frame **28** and configured to emit sound from the front end of the speaker assembly **20**. The speaker assembly **20**, and particularly the inner frame **28**, can define a central axis for sound projection that is directly out of the page as viewed in the front view of FIG. **2**. The illustrated inner frame **28** forms an acoustic horn for precisely controlling the directivity of a wide frequency range of sound. The inner frame **28** can thus include a primary flare or cone portion **28**A and a secondary flare or cone portion **28**B further forward and extending to the front edge **36**. A plurality of speaker drivers **48**A, **48**B supported by the illustrated inner frame **28** includes drivers (i.e., electrodynamic audio transducers) of different types, varying by frequency output. For example, the speaker assembly **20** includes a plurality (e.g., two) of high frequency drivers **48**A and a plurality (e.g., four) of low frequency drivers **48**B. As can be seen in FIGS. **3** and **4**, the low frequency drivers **48**B can be distributed around multiple sides of the inner frame **28**, for example on all four sides about the central axis. Openings **50** through the inner frame **28** are provided at the locations of the low frequency drivers **48**B so as to enable sound transmission from an outside of the inner frame **28** (within the resonator chamber **34**) to an inside of the inner frame **28**. The low frequency drivers **48**B are positioned farther forward than the high frequency drivers **48**A, which are coupled to the rear end or rear panel **60** of the inner frame **28**. Although not required in all embodiments, the rear of inner frame **28** includes an elongate slot opening **52** (FIG. **2**) forming a horn inlet to which the high frequency drivers **48**A are coupled through a wave guide **56**.

The inner frame rear panel **60** is attached to a transverse panel **62** of the outer enclosure **24**. The transverse panel **62** defines a rear end of the resonator chamber **34**, and as shown can be positioned forward of a rearmost outer panel **66** of the outer enclosure **24**. The transverse panel **62** can include an opening through which the high frequency drivers **48**A and the wave guide **56** can be passed, from front to rear, during assembly. Between the transverse panel **62** and the rearmost outer panel **66**, the wave guide **56** and high frequency drivers **48**A can be accommodated in a chamber divided from and acoustically sealed from the resonator chamber **34**. Attachment between the outer enclosure **24** and the inner frame **28** is made by a plurality of fastener joints, including forward and rearward fastener joints **70**A, **70**B. At least some of the forward fastener joints **70**A are distributed around multiple sides of the inner frame **28** and positioned closer to the front opening **30** of the outer enclosure than a rear end of the inner frame **28**, e.g., rear panel **60**. The forward fastener joints **70**A are positioned within the frontal 30 percent of the inner frame front-rear depth, or within the frontal 20 percent thereof, in some constructions. The forward fastener joints **70**A can be provided in an arrangement of two per side (top, bottom, left, and right sides) for a total of eight. The forward fastener joints **70**A can be partially or fully recessed in an interior surface of the inner frame **28**. Unlike the forward fastener joints **70**A, the rearward fastener joints **70**B all secure along parallel axes (e.g., front-rear). While the forward fastener joints **70**A are accessible for assembly from the interior of the inner frame **28** (e.g., the acoustic horn surface), the rearward fastener joints **70**B are accessible for assembly through one or more access ports **80** in the outer enclosure **24**, rearward of the resonator chamber **34**. The access ports **80** can be closed with removable panels upon final assembly and operation. In contrast, the resonator chamber **34** in which the speaker drivers **48**B are positioned may be completely devoid of removable panels and access ports around the side walls of the outer enclosure **24**.

In some constructions, the fastener placement is selected to minimize unwanted panel vibration and resonance in either or both of the inner frame **28** and the outer enclosure **24**. For example, placing some or all of the fastener joints **70**A, **70**B at antinodes of the natural panel resonances minimizes the extent to which they can be excited. There are varying degrees of optimization which can be done in this regard, including in some cases FEA simulation-based optimization.

The overall envelope of the speaker assembly **20** can be quite large in some constructions, for example at least 300 liters in volume, and in some cases 400 liters or more in volume. Thus, it follows that the outer enclosure **24** and the inner frame **28** are quite large, and with the numerous fastener joints **70**A, **70**B, may introduce a significant amount of tolerance stack-up, especially when one or both of the outer enclosure **24** and the inner frame **28** are constructed of wood as opposed to precision-molded plastics. However, because the perimeter port **42** is formed between the outer perimeter portion of the inner frame **28** and the front opening **30** of the outer enclosure **24**, assembly tolerances that may affect the placement (even if significantly off-center) of the

inner frame **28** in the front opening **30** do not affect the performance of the speaker assembly **20**, vis-à-vis the bass-reflex porting provided by the port **42**. The performance is a function of the total cross-section area of the port **42** and the volume of the resonator chamber **34**, regardless of the shape or layout of the port **42**. As a result, any shifting to one side that reduces port area simultaneously results in increasing the port area on the opposite side. The perimeter port **42** also maximizes space efficiency for the given port and inner frame sizing by not requiring an entire offsetting of the inner frame **28** in the front opening **30** to make room for a designated port location (e.g., conventional circular port).

The fastener joints **70**A, **70**B are configured to absorb the assembly tolerance between the outer enclosure **24** and the inner frame **28**. The tolerances on the overall dimensions of the speaker assembly **20** are determined only by the pieces in the outer enclosure **24**. The inner frame **28** has its own tolerances, and the tolerance stack-up is taken up by the fastener joints **70**A, **70**B that mount the two together. Because the performance of the resonator chamber **34** is not dependent upon a precise placement of the inner frame **28** within the front opening **30**, this is advantageously leveraged in order to preclude the need to hold very strict tolerances for assembly of the inner frame **28** to the outer enclosure **24**. This is accomplished through the fastener joints **70**A, **70**B, each of which includes a threaded fastener **72**, a washer **74**, a clearance hole **76** for receiving the threaded fastener **72**, and a nut portion **78** for engaging the threaded fastener **72**. The threaded fasteners **72** can be of a relatively large size (e.g., M8, M10 or larger). As best shown in FIGS. **7**B and **8**A, the nut portions **78** can be formed as part of an angle bracket in the case of the forward fastener joints **70**A, and can be formed as T-nuts in the case of the rearward fastener joints **70**B. However, the nut portions **78** can be formed in a variety of ways in alternate constructions, for example, spring nuts, speed nuts, self-clinching nuts, locking nuts, or in some cases conventional nuts. The angle brackets at the forward fastener joints **70**A can be secured to structural ribbing **84** protruding inward from the inner wall surface of the outer enclosure **24**. As shown in FIGS. **7** and **8**, similar structural ribbing **86** can be provided to protrude outward from the outer wall surface of the inner frame **28**. The respective ribbing **84**, **86** can abut, form a sliding interface, overlap in a radial direction, or otherwise interface with each other. As shown, the angle brackets at the forward fastener joints **70**A have a portion that lies coplanar with (e.g., and directly against) the outer wall surface of the inner frame **28**, and this negates the need for additional brackets or hardware extending from the inner frame **28**. In other constructions, a single bracket between the inner frame **28** and the outer enclosure **24** can have a portion that lies coplanar with (e.g., and directly against) the inner wall surface of the outer enclosure **24**. In either case, a single bracket is used at each forward fastener joint **70**A, despite that the outer wall surface of the inner frame **28** and the inner wall surface of the outer enclosure **24** are non-parallel, i.e., arranged at a skew or oblique angle.

Even for the large-sized threaded fasteners **72**, the washers **74** can be oversized (e.g., outer diameter of 5 times or more the shank diameter of the threaded fastener **72**). The reason for oversizing the washers **74** is to ensure that the washers **74** sufficiently extend beyond the clearance holes **76** when assembled. Given that these fastener joints **70**A, **70**B are designed as the part of the speaker assembly **20** that accommodates assembly tolerance between the primary nested components of the outer enclosure **24** and the inner frame **28**, the clearance hole **76** of each of the plurality of fastener joints **70**A, **70**B provides a clearance at least 25 percent over (e.g., 35 percent over) the standard "normal" clearance for the size of the threaded fastener **72**. The standard normal fastener clearance diameter is determined by an American or international engineering organization or governing body, e.g., ASME B18.2.8. Although all of the fastener joints **70**A, **70**B can be provided with identical fasteners **72** and clearance dimensioning throughout the sum total of interfaces between the outer enclosure **24** and the inner frame **28**, it is also contemplated that intentional variation may be utilized at different ones of the fastener joints **70**A, **70**B.

The method of assembly of the speaker assembly **20** is significantly easier than most speaker assemblies of similar size and makeup. According to aspects of the present disclosure, the low frequency speaker drivers **48**B are mounted to the inner frame **28** prior to insertion of the inner frame into the outer enclosure **24**. Thus, a subassembly of one or more speaker drivers is created outside of and separate from the outer enclosure **24**. This removes the requirement for access panels to install the low frequency speaker drivers **48**B, and as such, the outer enclosure **24** may be provided with none. In some constructions, the high frequency driver(s) **48**A and/or supporting electronics (e.g., frequency-filtering crossover network) are assembled to the inner frame **28** prior to installation into the outer enclosure **24**. To this extent of this concept, a complete subassembly unit (FIGS. **3** and **4**) may be formed to include the inner frame **28**, multiple speaker drivers, including multiple high frequency drivers **48**A (e.g., and associated wave guide **56**) and multiple low frequency drivers **48**B, and corresponding crossover networks prior to assembly into the outer enclosure **24**. Assembly is completed by rearward insertion of the subassembly unit with the inner frame **28** through the front opening **30** of the outer enclosure **24** to a depth at which the fastener joints **70**A, **70**B can be secured. As mentioned above, precision at this step is not required as the fastener joints **70**A, **70**B absorb the assembly tolerance and uniformity around the perimeter port **42** is not a prerequisite to achieve the prescribed performance. However, if it is desired to precisely place the inner frame **28** with respect to the outer enclosure **24** (e.g., centered in the front opening **30**), this may be achieved by the use of temporary or permanent spacers between the outer enclosure **24** and the inner frame **28** to set the desired spacing prior to final securement of the fastener joints **70**A, **70**B.

Various aspects of the present disclosure are set forth in the following claims.

What is claimed is:

1. A ported speaker assembly comprising:

an outer enclosure having a front opening;

an inner frame positioned at least partially within the outer enclosure and having an outer perimeter portion proximate the front opening of the outer enclosure;

a resonator chamber defined between an interior of the outer enclosure and an exterior of the inner frame;

at least one speaker driver mounted to the inner frame and configured to emit sound from a front end of the ported speaker assembly;

a perimeter port formed between the outer perimeter portion of the inner frame and the front opening of the outer enclosure to establish sound wave communication between the resonator chamber and a surrounding external atmosphere for tuned-frequency resonance output, and wherein the perimeter port extends uninterrupted about the outer perimeter edge of the inner frame so as to encircle the outer perimeter edge; and

a plurality of fastener joints securing the inner frame to the outer enclosure, wherein at least some of the plurality of fastener joints are distributed around multiple sides of the inner frame and positioned closer to the front opening of the outer enclosure than a rear end of the inner frame,

wherein the plurality of fastener joints are configured to absorb all assembly tolerance between the outer enclosure and the inner frame such that the tolerances on the overall dimensions of the speaker assembly are determined by the outer enclosure alone.

2. The ported speaker assembly of claim **1**, wherein the outer perimeter portion of the inner frame is provided by a forwardmost edge of the inner frame.

3. The ported speaker assembly of claim **1**, wherein the inner frame is an acoustic horn for the at least one speaker driver mounted thereto.

4. The ported speaker assembly of claim **1**, wherein a total envelope of the ported speaker assembly is at least 300 liters in volume.

5. The ported speaker assembly of claim **1**, wherein the at least one speaker driver includes multiple low frequency speaker drivers and multiple high frequency speaker drivers.

6. The ported speaker assembly of claim **1**, wherein each of the plurality of fastener joints includes a threaded fastener that extends through a corresponding clearance hole, and wherein the clearance hole of each of the plurality of fastener joints provides a clearance at least 25 percent over standard normal clearance for the size of the threaded fastener.

7. The ported speaker assembly of claim **1**, wherein the at least one speaker driver includes at least one low frequency speaker driver positioned within the resonator chamber, and wherein the outer enclosure is devoid of access ports into the resonator chamber.

8. A ported speaker assembly comprising:

an outer enclosure having a front opening defined between a top side, a bottom side, and two lateral sides;

an inner frame positioned at least partially within the outer enclosure and having an outer perimeter portion proximate the front opening of the outer enclosure;

a resonator chamber defined between an interior of the outer enclosure and an exterior of the inner frame;

at least one speaker driver mounted to the inner frame and configured to emit sound from a front end of the ported speaker assembly;

a perimeter port formed between the outer perimeter portion of the inner frame and the front opening of the outer enclosure to establish sound wave communication between the resonator chamber and a surrounding external atmosphere for tuned-frequency resonance output; and

a plurality of fastener joints securing the inner frame to the outer enclosure, each of the plurality of fastener joints including a threaded fastener, a clearance hole for receiving the threaded fastener, and a nut portion for engaging the threaded fastener,

wherein the clearance hole of each of the plurality of fastener joints provides a clearance at least 25 percent over standard normal clearance for the size of the threaded fastener.

9. The ported speaker assembly of claim **8**, wherein the plurality of fastener joints are dispersed among the top, bottom, and two lateral sides on an interior of the outer enclosure, wherein the plurality of fastener joints are provided on a front half of an overall depth of the speaker assembly.

10. The ported speaker assembly of claim **8**, wherein the clearance hole of each of the plurality of fastener joints provides a clearance at least 35 percent over standard clearance for the size of the threaded fastener.

11. The ported speaker assembly of claim **8**, wherein the total envelope of the ported speaker assembly is at least 300 liters in volume.

12. The ported speaker assembly of claim **8**, wherein the inner frame is an acoustic horn for the at least one speaker driver mounted thereto.

13. The ported speaker assembly of claim **8**, wherein the outer perimeter portion of the inner frame is provided by a forwardmost edge of the inner frame.

14. The ported speaker assembly of claim **8**, wherein the at least one speaker driver includes multiple low frequency speaker drivers and multiple high frequency speaker drivers.

15. A method of assembling a ported speaker assembly, the method comprising:

providing an outer enclosure having a front opening;

providing an inner frame having an outer perimeter portion with a shape that corresponds to that of the front opening and a size that is smaller than that of the front opening;

assembling at least one speaker driver to the inner frame with the inner frame removed from the outer enclosure;

inserting the inner frame with the at least one mounted speaker driver into the outer enclosure through the front opening thereof to form a perimeter port between the outer perimeter portion of the inner frame and the front opening of the outer enclosure, wherein a resonator chamber is defined between an interior of the outer enclosure and an exterior of the inner frame; and

absorbing all assembly tolerance between the inner frame and the outer enclosure through a plurality of fastener joints that are secured between the inner frame and the outer enclosure.

16. The method of claim **15**, wherein the insertion of the inner frame includes passing at least one high frequency speaker driver through the resonator chamber and into a separate acoustically-sealed chamber of the outer enclosure while simultaneously positioning at least one low frequency speaker driver inside the resonator chamber.

17. The method of claim **15**, wherein securing each of the plurality of fastener joints includes inserting a threaded fastener through a clearance hole and engaging the threaded fastener with a nut portion, wherein the clearance hole of each of the plurality of fastener joints provides a clearance at least 25 percent over standard normal clearance for the size of the threaded fastener.

18. The method of claim **15**, wherein securing the plurality of fastener joints includes securing a plurality of forward fastener joints dispersed among top, bottom, and two lateral sides on an interior of the outer enclosure, at a position within a front half of an overall depth of the speaker assembly, and securing a plurality of rearward fastener joints at an interface of a rear panel of the inner frame and a transverse panel of the outer enclosure that defines a rear end of the resonator chamber.

19. The method of claim **18**, wherein the plurality of forward fastener joints are secured from an open front end of the inner frame, and the plurality of rearward fastener joints are secured through an access port in the outer enclosure.

* * * * *